Release

LIFTER
SCREW

FOR ELEVATOR BELT WITH HEX NUT

With an innovative head to provide even more adherence to the belt.

Ciser stands out as a pioneer in the domestic market for supplying **elevator belt screws** with this geometry.

Change in the geometric concept of the product´s lock (protrusion below the head replaced with stamped teeth) improves interlocking of the screw in the rubber and ensures greater safety and efficiency when installing the buckets used in elevators for transporting grain and similar products.

INNOVATIVE HEAD PROFILE

The new **Lifter Screws for elevator belts with hex nut** have two claws that provide greater adherence to the belt, and consequently, greater resistance against rotating when applying, allowing the nut to be easily placed or removed.

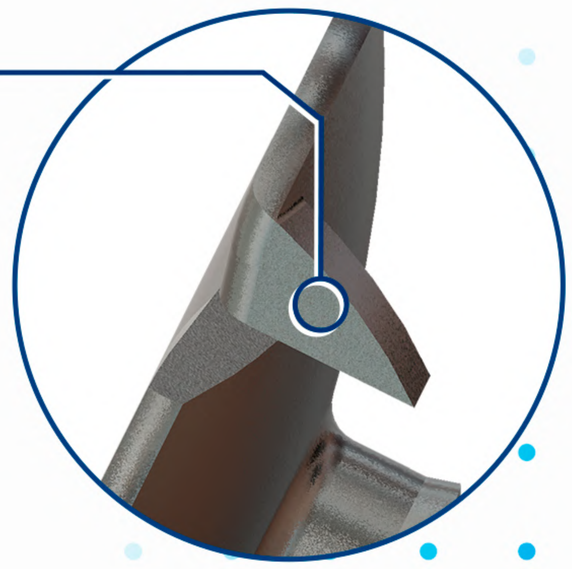

LIFTER
SCREW
FOR ELEVATOR BELT WITH HEX NUT

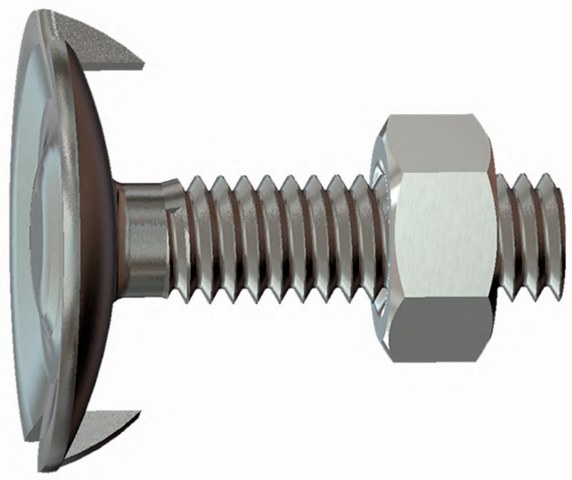

Line 1N331

Dimensões / *Dimensiones* / Dimensions						
Dimensão nominal / *Dimensión nominal* / Nominal size	1/4”			5/16”		
F.P.P. / *H.P.P.* / T.P.I.	20			18		
ø Cabeça / *Cabeza* / Head (ref.)	23			28		
Comprimento / *Longitud* / Length	Referência / *Referencia* / Reference					
3/4”	158	00	2	208	00	2
7/8”	159	00	2			
1”	160	00	2	210	00 01	2
1.1/4”	161	00	2	211	00 01 02	2
1.1/2”	162	00	2	212	00 02	2
1.3/4”				213	00	2
2”				214	00	2

Line 1N334

Dimensões / *Dimensiones* / Dimensions								
Dimensão nominal / *Dimensión nominal* / Nominal size	M6			M8			M12		
Passo / *Paso* / Pitch	1,0			1,25			1,75		
ø Cabeça / *Cabeza* / Head (ref.)	20			28			42		
Comprimento / *Longitud* / Length	Referência / *Referencia* / Reference								
25				359	00	2			
30	261	00	2	361	00 01	2			
35				362	00	2			
40				363	00	2	463	00	1
45							464	00	1

Obs.: Bitola M10 disponível na Linha 334.

Line 1N336

Dimensões / *Dimensiones* / Dimensions						
Dimensão nominal / *Dimensión nominal* / Nominal size	1/4”			5/16”		
F.P.P. / *H.P.P.* / T.P.I.	20			18		
ø Cabeça / *Cabeza* / Head (ref.)	25			30		
Comprimento / *Longitud* / Length	Referência / *Referencia* / Reference					
3/4”	158	00	2			
1”	160	00	2	210	00	2
1.1/4”	161	00	2	211	00	2
1.1/2”	162	00	2	212	00	2
1.3/4”				213	00	2
2”				214	00	2

Obs.: Bitola 3/8 disponível na Linha 336.

Acabamento: **00** Polido — *Acabado:* *Sin Recubrimiento* — Finish: Plain
01 Zincado Branco — *Cincado Blanco* — Zinc Plated
02 Bicromatizado — *Cincado Amarillo* — Yellow Zinc

Embalagem padrão em cento
Embalaje padrón en ciento
Standard packaging in hundred